UPPSALA UNIVERSITET

eurostars™

A Planar Single-ended Kilowatt-level VHF Class E Power Amplifier

Renbin Tong, Stefan Book, Long Hoang Duc, Dragos Dancila

Uppsala University

ARIES Workshop

Uppsala, Sweden

19 June 2019

UPPSALA UNIVERSITET

eurostars™

Outline

- Project background
- Simple theory - introduction
- Circuit simulation analysis
- Realized circuit
- Measurements & results
- Conclusion

Background: Cyclotron

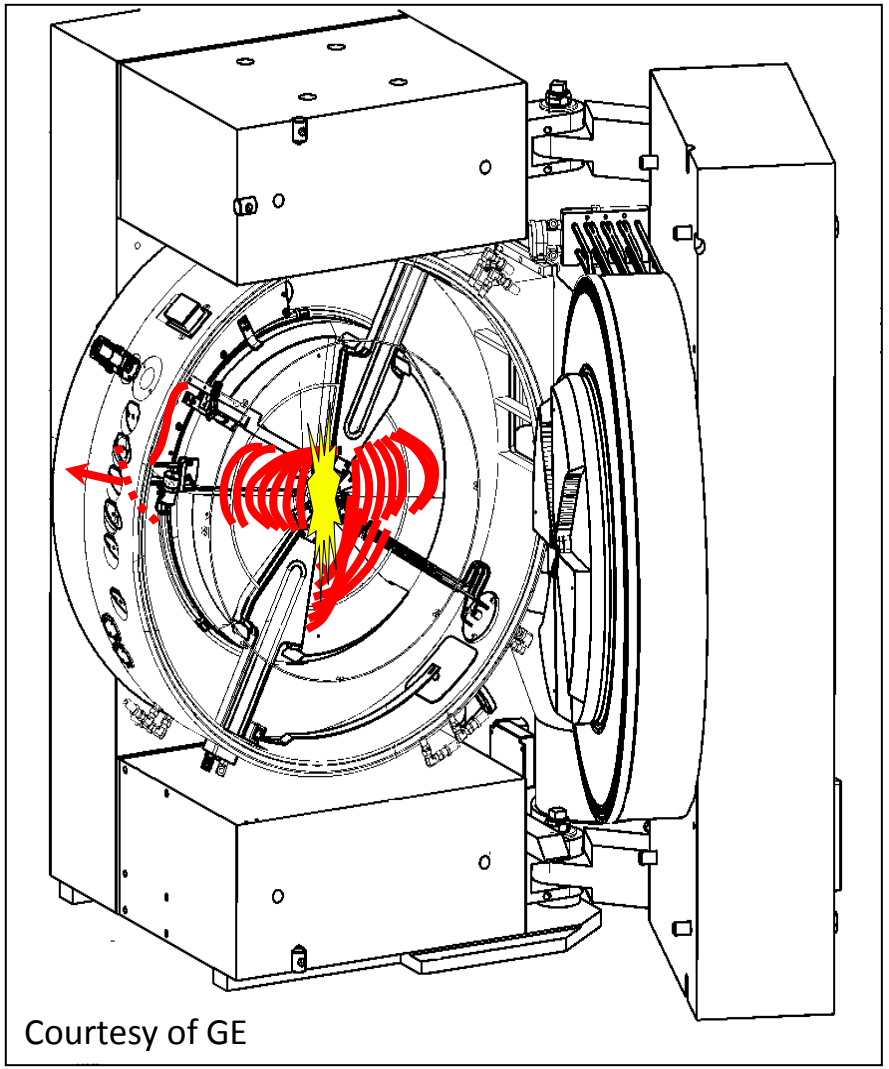
Courtesy of GE

- Eurostar ENEFRF project: 10 kW high efficient RF power sources for cyclotron particle accelerator at 27 and 101 MHz
- The highest output power for LDMOS technology is about 1.8 kW
- Combine 10-12 power amplifier modules at half the nominal power
- Each module output 1 kW, eff>80%.

Amplifier classes of operation

Class A

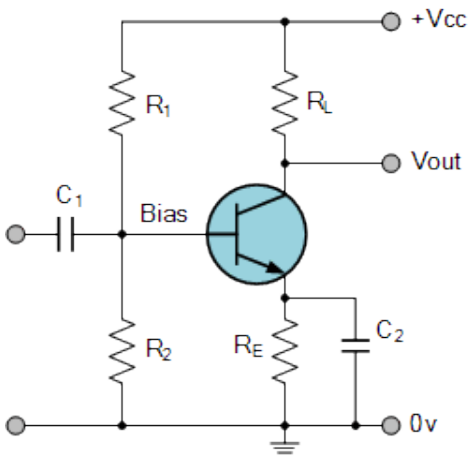

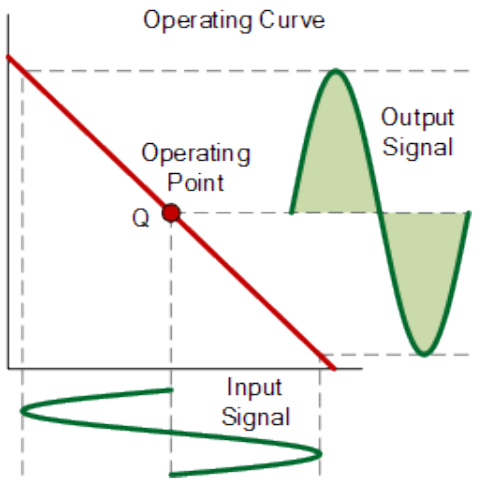

Class B

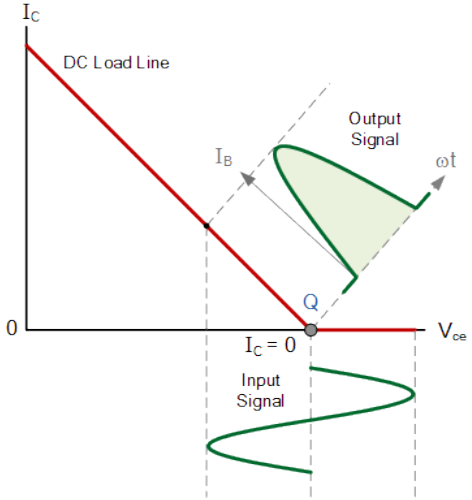

Push-pull class AB

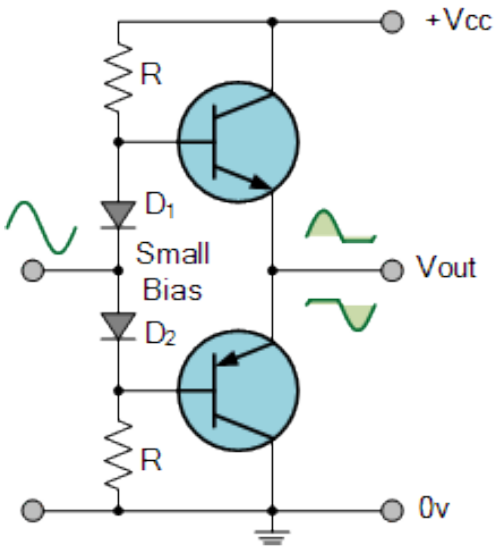

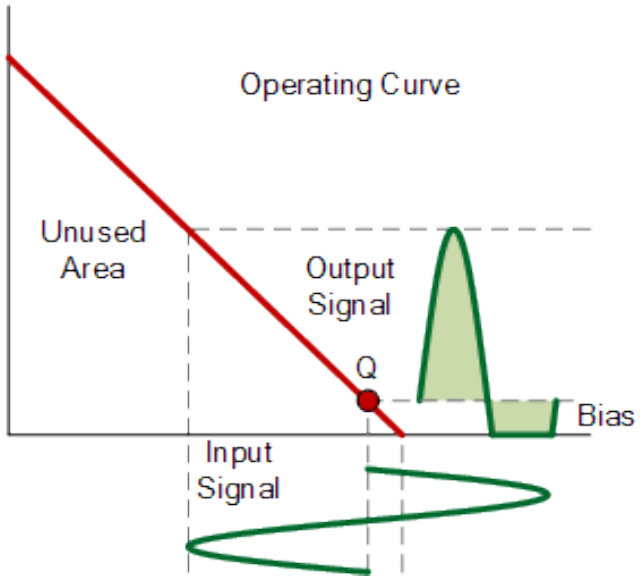

Background : Class E

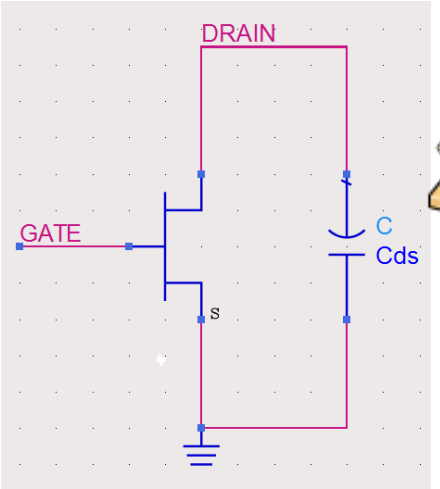

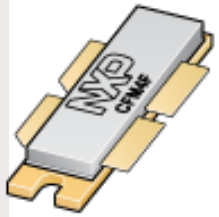

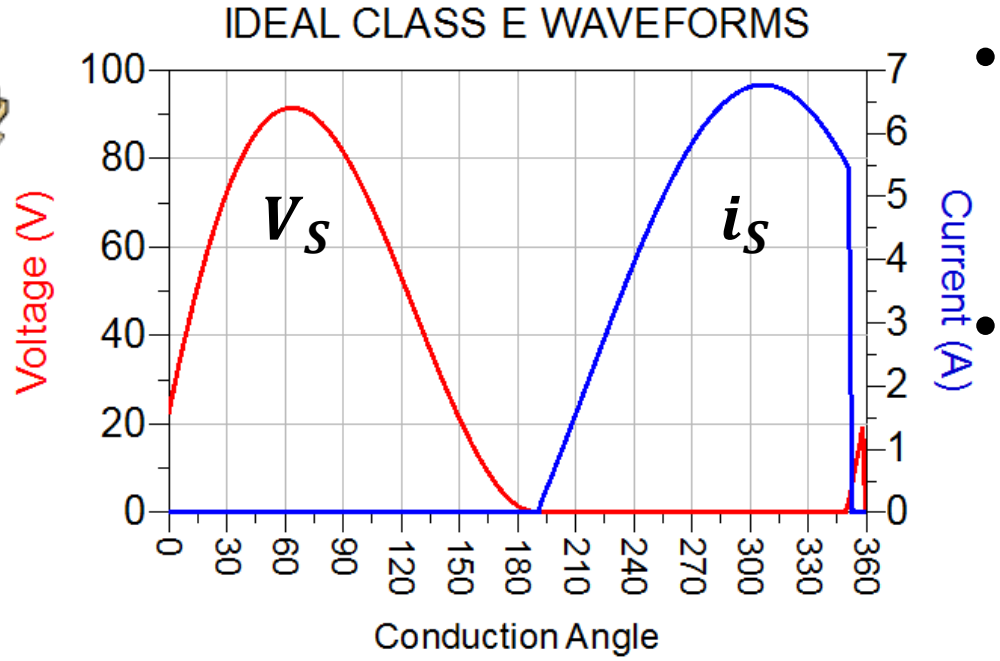

- Class E amplifier is a well known a high efficiency switching mode amp.
- novelty: planar structure, kW level

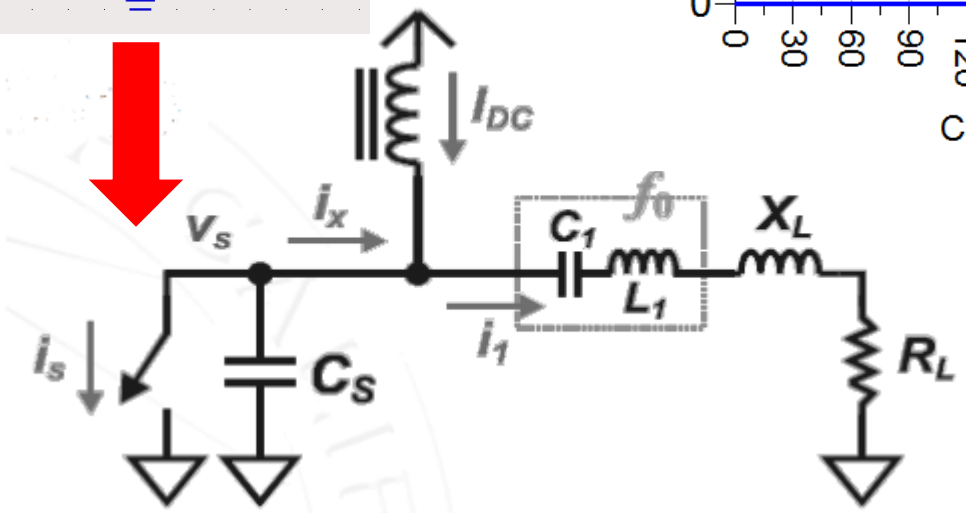

- Non-negligible parasitic capacitor Cds contributes to shunt capacitor C_S in Class E operation.

Push-pull and single ended architectures

UPPSALA UNIVERSITET

eurostars™

Push-pull

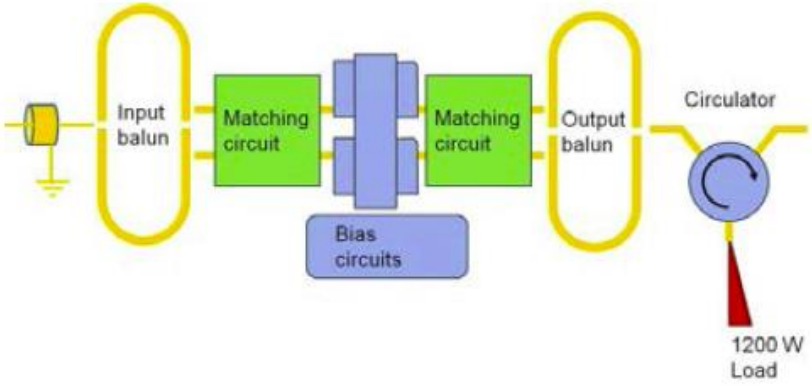

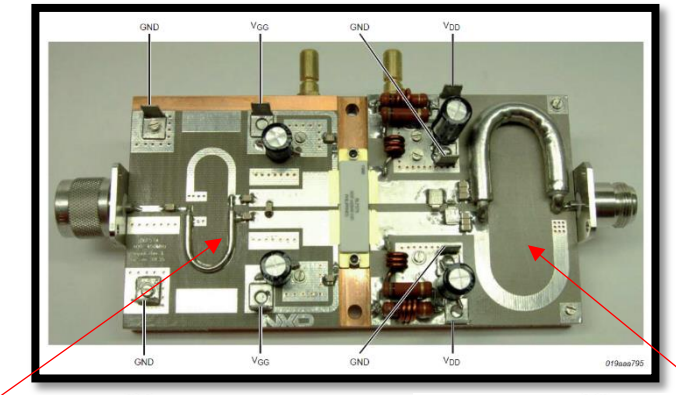

input balun

output balun

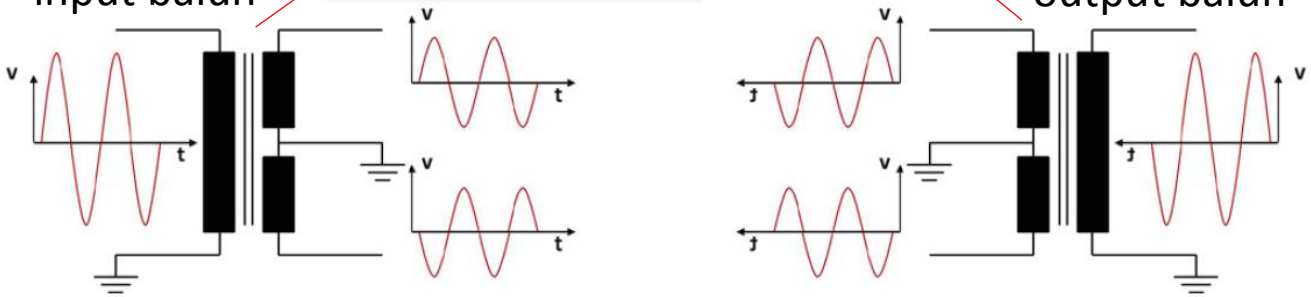

Single Ended (resonant output network)

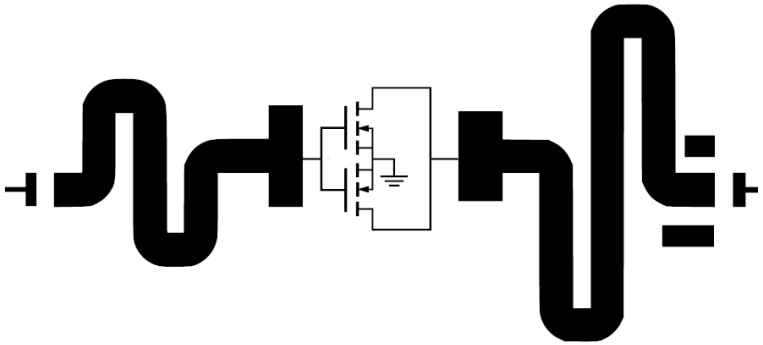

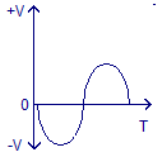

input voltage

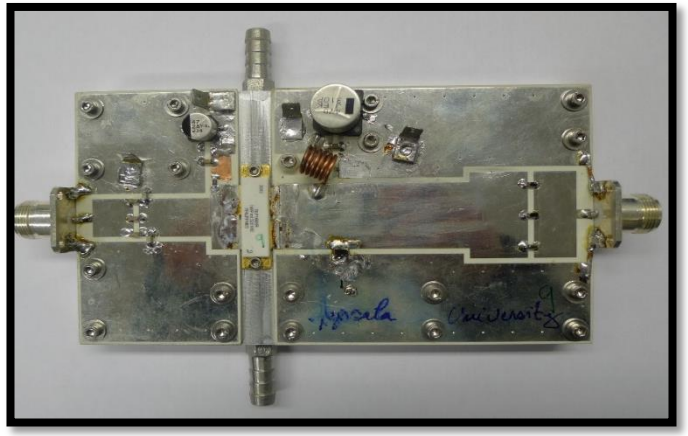

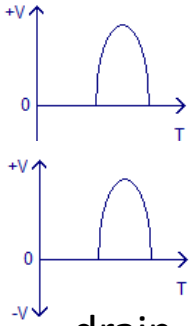

drain voltage

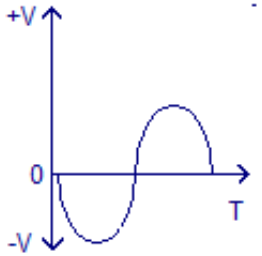

output voltage

Planar Layout EM Simulation

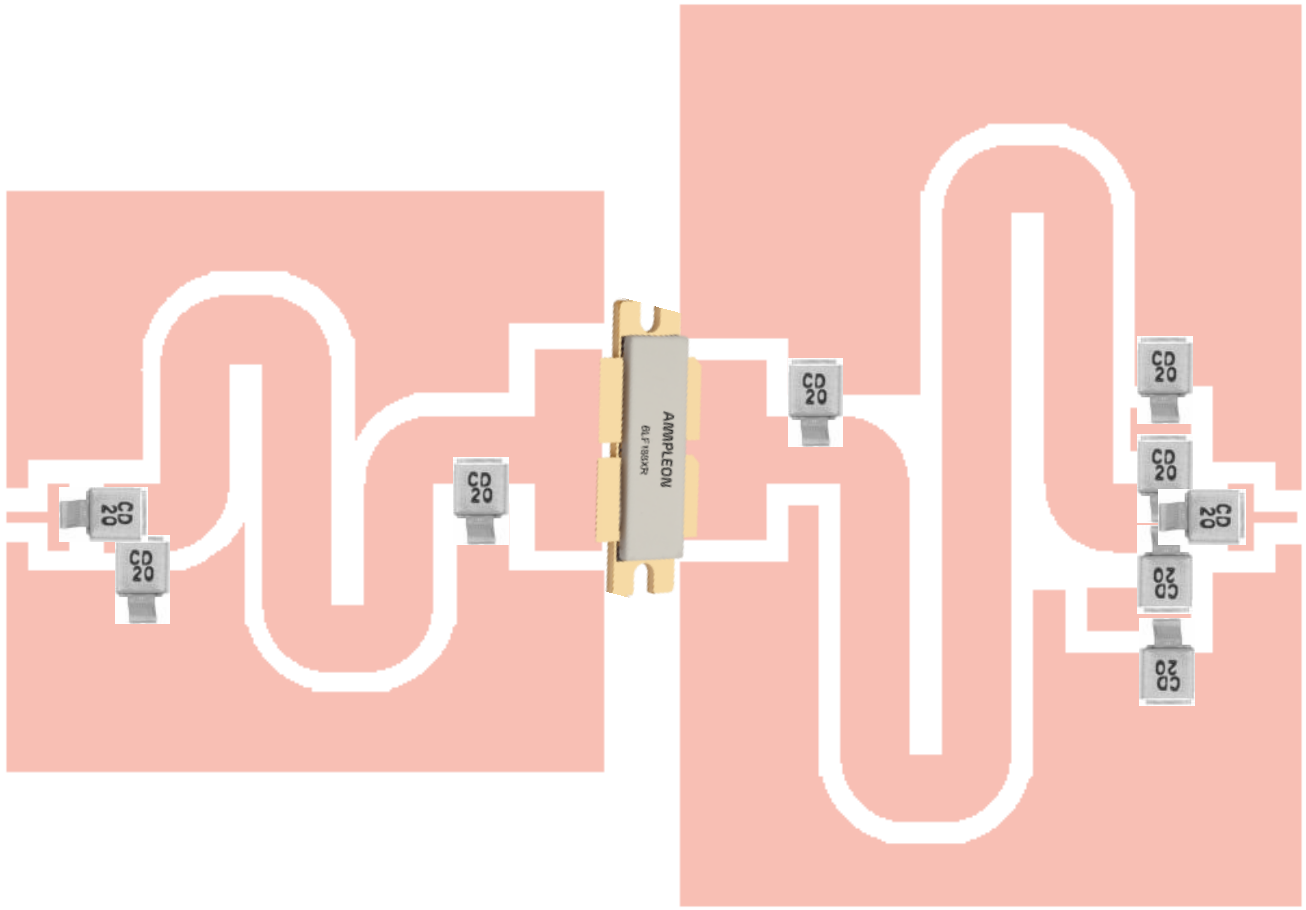

Layout of final planar circuit

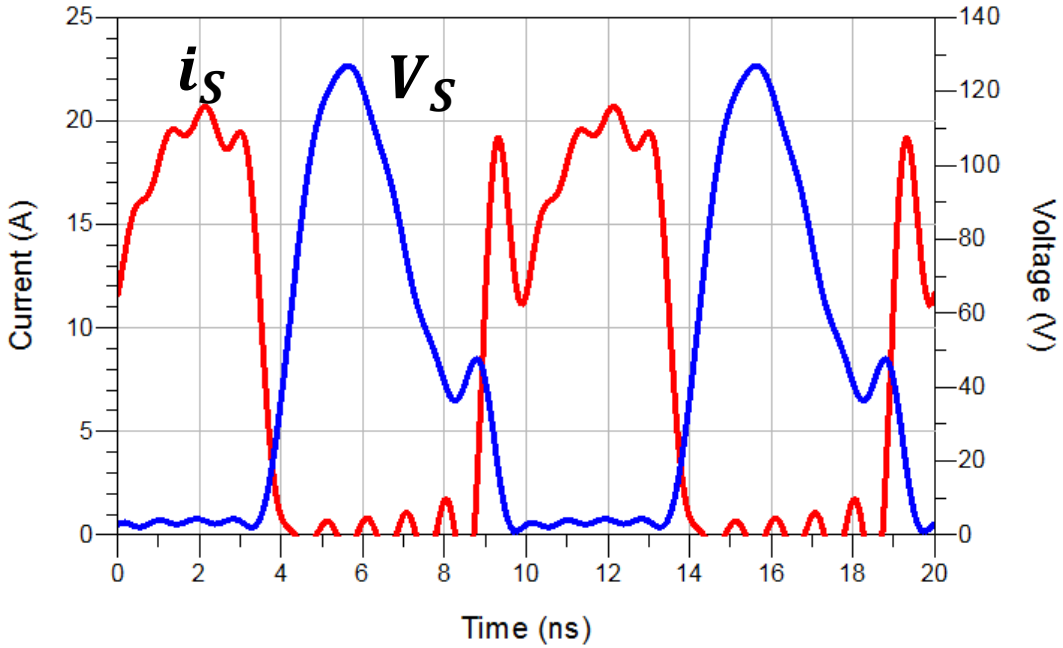

waveform at transistor's drain side

Work Prototype for Measurement

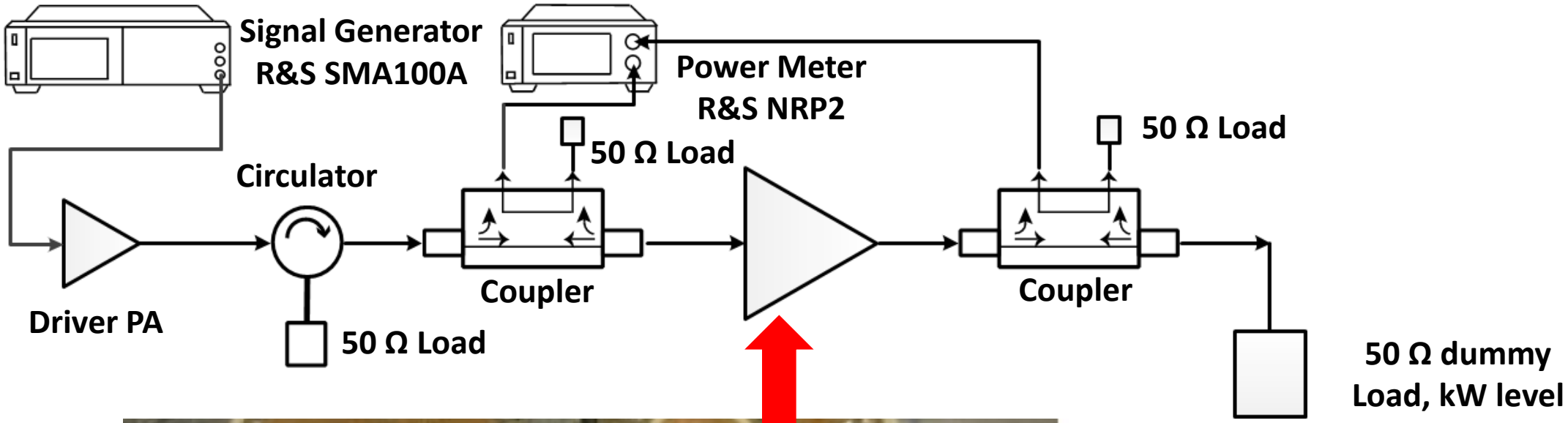

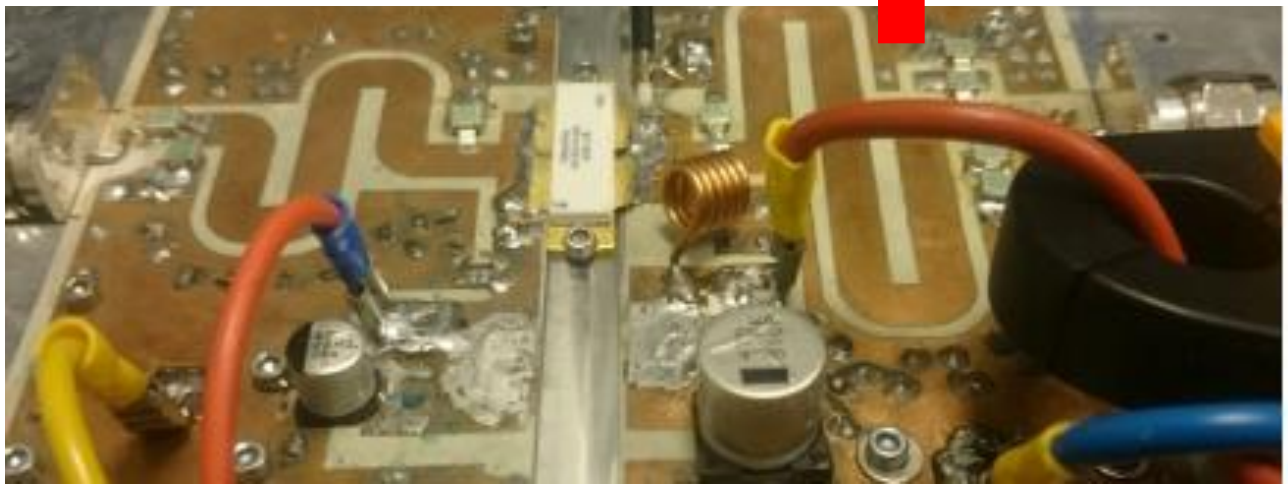

Measured Results

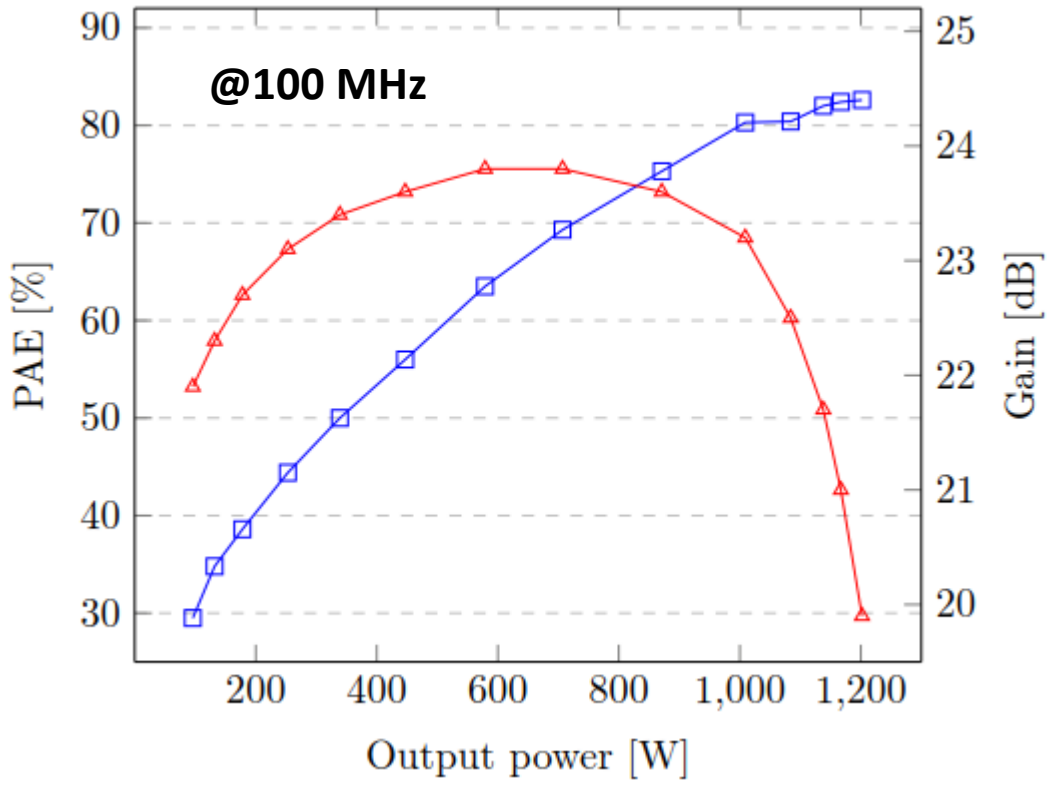

Pout=1200W, Eff= 83%

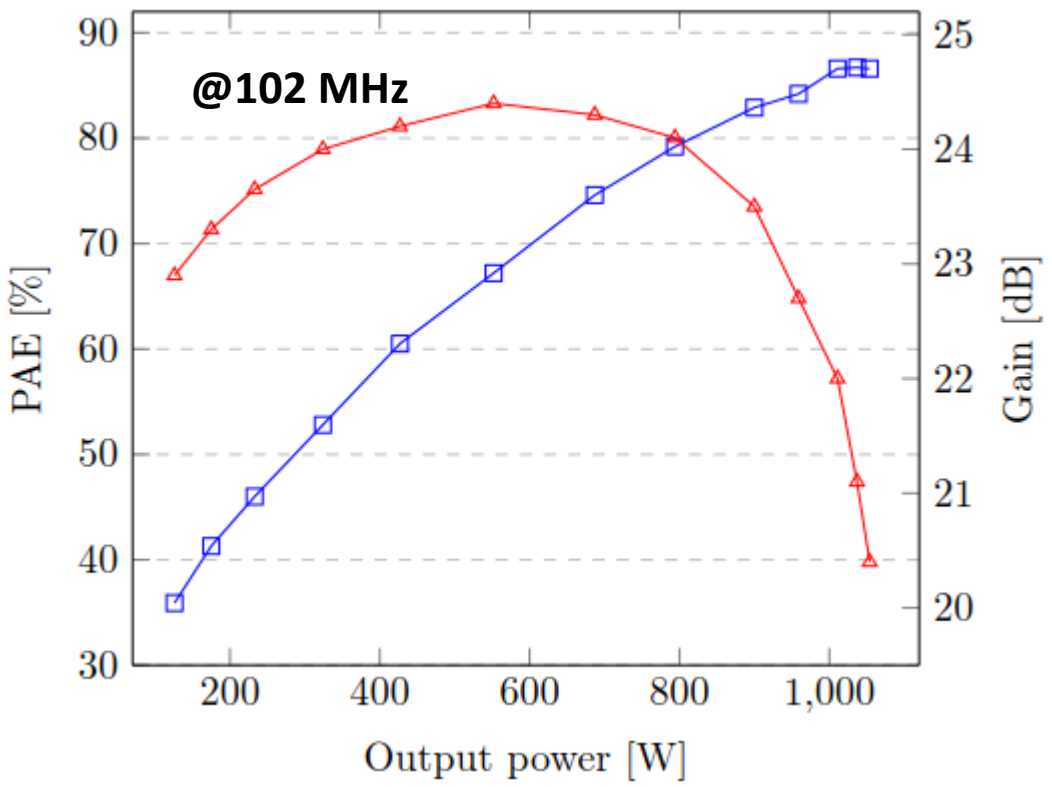

Pout=1000W, Eff= 87%

State of the Art

Table 3. State of The Art

Ref.	Class	P_{out} [W]	f [MHz]	η [%]	DC[%]
[9]	AB	1250	352	71	5
[10]	AB	2000	352	72	20
[11]	AB	700	400-500	75	15
[12]	B	1000	420-450	70	10
This work	E	1010	102	87	5

[9] L. Haapala *et al.*, "Kilowatt-level power amplifier in a single-ended architecture at 352 mhz," *Electronics Letters*, vol. 52, pp. 1552–1554, Feb. 2016.

[10] A. Smirnov *et al.*, "72 mhz solid-state amplifier power test," in *5th Int. Particle Accelerator Conf. IPAC'14*, 2014, pp. 2270–2272.

[11] S. Tang *et al.*, "A 700w push-pull algan/gan power amplifier for p-band aerospace application," in *International Conference on Electromagnetics in Advanced Applications (ICEAA)*, 2016, pp. 153–455.

[12] G. Formicone *et al.*, "A uhf 1-kw solid-state power amplifier for spaceborne sar," in *IEEE Topical Conference on RF/Microwave Power Amplifiers for Radio and Wireless Applications (PAWR)*, 2017, pp. 33–36.

Conclusion

- Verified the feasibility of Class E high power/high efficiency amplifier
- Achieved 1000 Watts with 87% in a single-ended prototype
- Improved the state of art -> accepted for EUMW 2019 in Paris