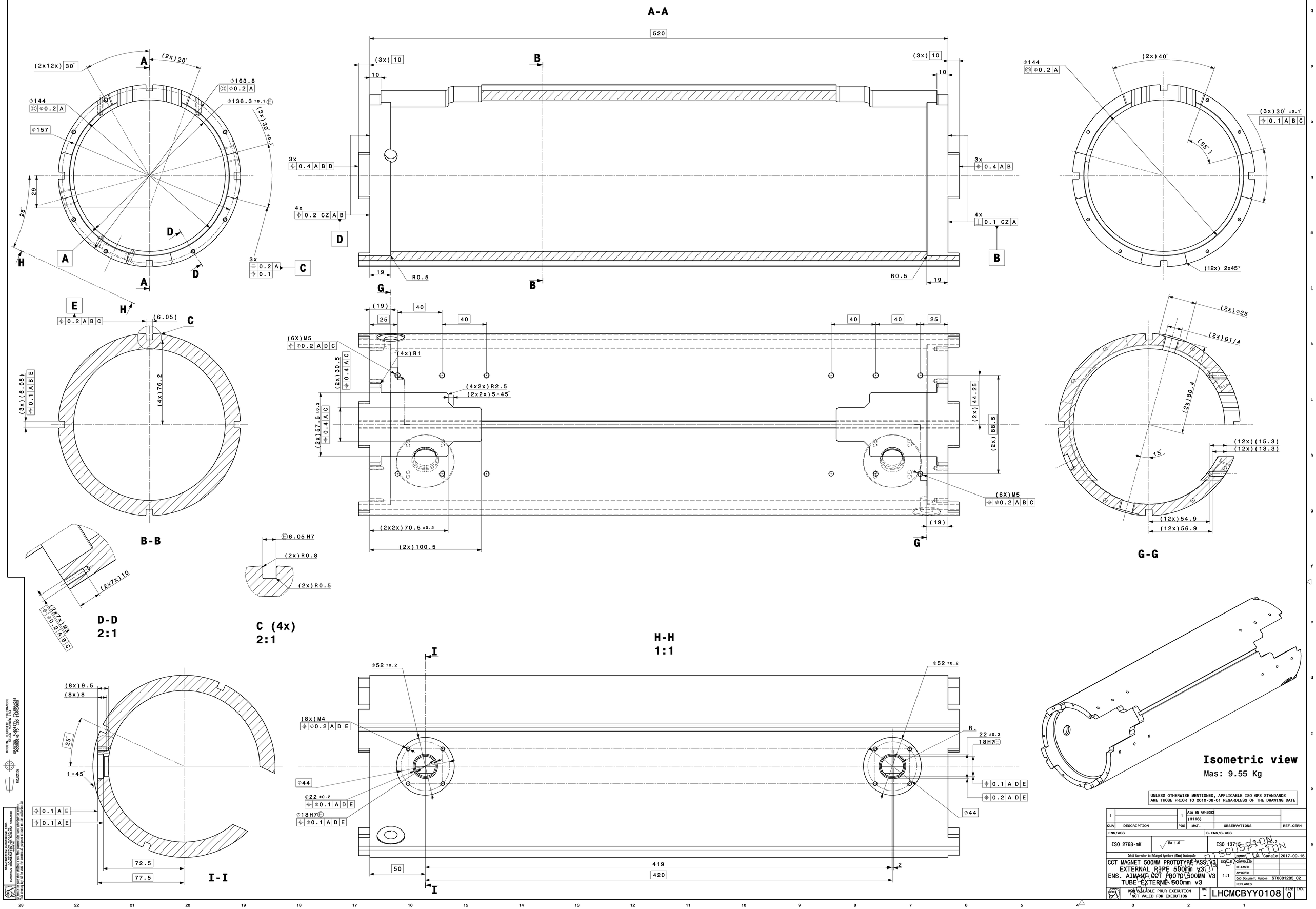
A-A
520
(3x) 10
10
B
3x
0.4 A B D
4x
0.2 CZ A B
D
19
R0.5
3x
0.4 A B
4x
0.1 CZ A
(2x12x) 30°
(2x) 20°
Φ163.8
Φ0.2 A
Φ144
Φ0.2 A
Φ136.3 ±0.1
(3x) 30° ±0.1°
Φ157
29
25°
H
A
D
3x
0.2 A
0.1
C
E
0.2 A B C
(6.05)
(3x) (6.05)
0.1 A B E
(4x) 76.2
B-B
(2x7x) 10
(2x7x) M3
Φ0.2 A B C
D-D
2:1
6.05 H7
(2x) R0.8
(2x) R0.5
C (4x)
2:1
(19)
25
40
(6X) M5
Φ0.2 A D C
(4x) R1
(2x) 30.5
0.4 A C
(4x2x) R2.5
(2x2x) 5×45°
(2x) 57.5 ±0.2
0.4 A C
(2x) 44.25
(2x) 88.5
(6X) M5
Φ0.2 A B C
(2x2x) 70.5 ±0.2
(2x) 100.5
G
Φ144
Φ0.2 A
(2x) 40°
(3x) 30° ±0.1°
0.1 A B C
(55°)
(12x) 2x45°
(2x) Φ25
(2x) G1/4
(2x) 80.4
15°
(12x) (15.3)
(12x) (13.3)
(12x) 54.9
(12x) 56.9
G-G
H-H
1:1
I
Φ52 ±0.2
(8x) M4
Φ0.2 A D E
Φ44
Φ22 ±0.2
Φ0.1 A D E
Φ18H7
Φ0.1 A D E
R.
22 ±0.2
18H7
0.1 A D E
0.2 A D E
Φ44
50
419
420
2
(8x) 9.5
(8x) 8
25°
1×45°
0.1 A E
0.1 A E
72.5
77.5
I-I
Isometric view
Mas: 9.55 Kg
UNLESS OTHERWISE MENTIONED, APPLICABLE ISO GPS STANDARDS ARE THOSE PRIOR TO 2010-08-01 REGARDLESS OF THE DRAWING DATE
1
1
Alu EN AW-5083 (H116)
QUA
DESCRIPTION
POS
MAT.
OBSERVATIONS
REF.CERN
ENS/ASS
S.ENS/S.ASS
ISO 2768-mK
Ra 1.6
ISO 13715
Orbit Corrector in Enlarged Aperture (90mm) Quadrupole
CCT MAGNET 500MM PROTOTYPE ASS. V3
EXTERNAL PIPE 500mm v3
ENS. AIMANT CCT PROTO 500MM V3
TUBE EXTERNE 500mm v3
SCALE
1:1
DRAWN
M. Canale
2017-09-15
CONTROLLED
RELEASED
APPROVED
CAD Document Number
ST0881285_02
REPLACES
NON VALABLE POUR EXECUTION
NOT VALID FOR EXECUTION
QAC
-
LHCMCBYY0108
SIZE
0
IND.
DISCUSSION
EXECUTION